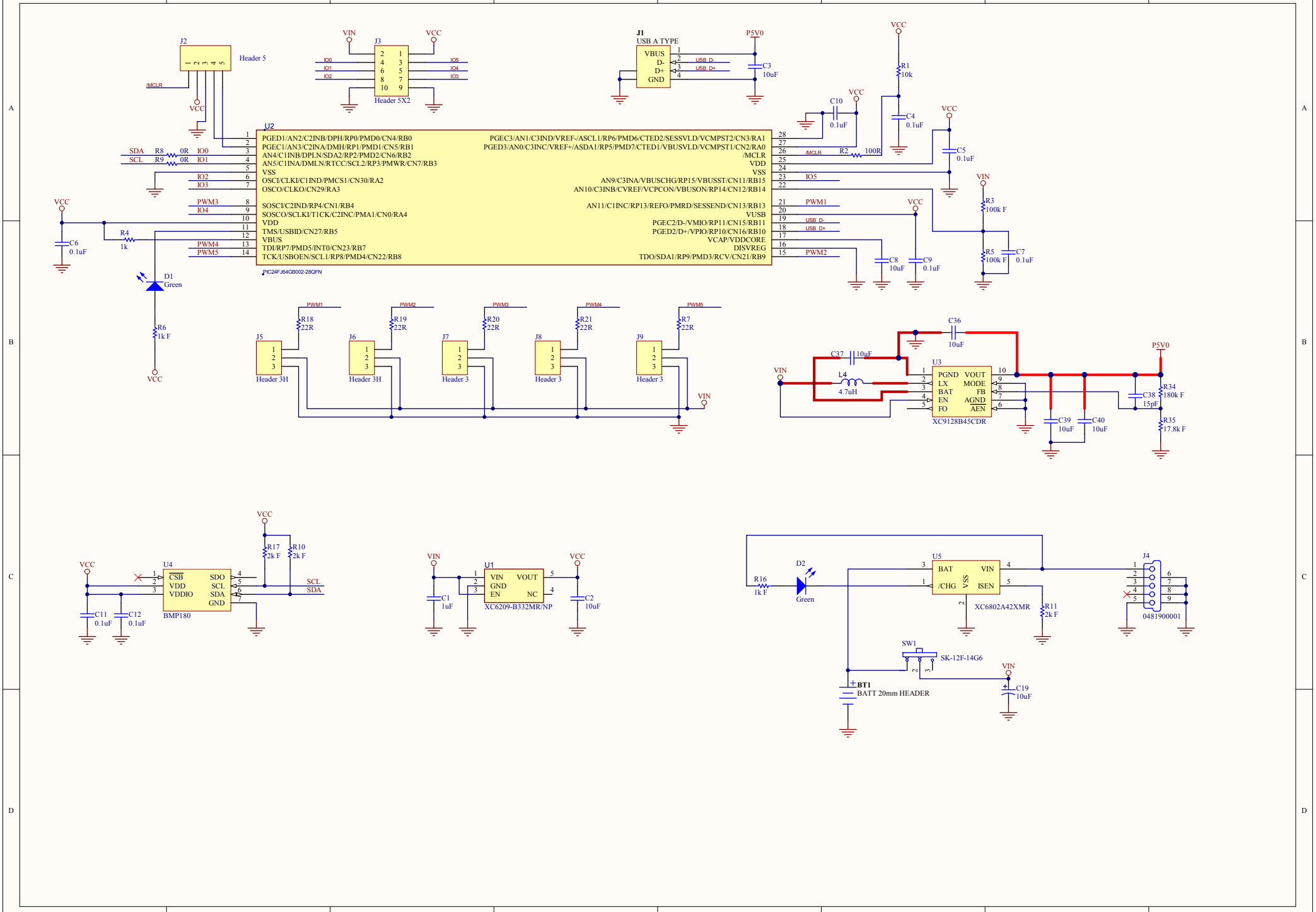
J2
Header 5
/MCLR
VCC
VIN
J3
Header 5X2
IO0
IO1
IO2
IO5
IO4
IO3
J1
USB A TYPE
VBUS
D-
D+
GND
USB_D-
USB_D+
P5V0
C3
10uF
R1
10k
C4
0.1uF
C10
0.1uF
C5
0.1uF
R2
100R
U2
PGED1/AN2/C2INB/DPH/RP0/PMD0/CN4/RB0
PGEC1/AN3/C2INA/DMH/RP1/PMD1/CN5/RB1
AN4/C1INB/DPLN/SDA2/RP2/PMD2/CN6/RB2
AN5/C1INA/DMLN/RTCC/SCL2/RP3/PMWR/CN7/RB3
VSS
OSCI/CLKI/C1IND/PMCS1/CN30/RA2
OSCO/CLKO/CN29/RA3
SOSCI/C2IND/RP4/CN1/RB4
SOSCO/SCLKI/T1CK/C2INC/PMA1/CN0/RA4
VDD
TMS/USBID/CN27/RB5
VBUS
TDI/RP7/PMD5/INT0/CN23/RB7
TCK/USBOEN/SCL1/RP8/PMD4/CN22/RB8
PGEC3/AN1/C3IND/VREF-/ASCL1/RP6/PMD6/CTED2/SESSVLD/VCMPST2/CN3/RA1
PGED3/AN0/C3INC/VREF+/ASDA1/RP5/PMD7/CTED1/VBUSVLD/VCMPST1/CN2/RA0
/MCLR
VDD
VSS
AN9/C3INA/VBUSCHG/RP15/VBUSST/CN11/RB15
AN10/C3INB/CVREF/VCPCON/VBUSON/RP14/CN12/RB14
AN11/C1INC/RP13/REFO/PMRD/SESSEND/CN13/RB13
VUSB
PGEC2/D-/VMIO/RP11/CN15/RB11
PGED2/D+/VPIO/RP10/CN16/RB10
VCAP/VDDCORE
DISVREG
TDO/SDA1/RP9/PMD3/RCV/CN21/RB9
PIC24FJ64GB002-28QFN
SDA
SCL
R8
R9
0R
IO0
IO1
IO2
IO3
PWM3
IO4
PWM4
PWM5
PWM1
PWM2
IO5
USB_D-
USB_D+
R3
100k F
R5
100k F
C7
0.1uF
C8
10uF
C9
0.1uF
C6
0.1uF
R4
1k
D1
Green
R6
1k F
J5
J6
J7
J8
J9
Header 3H
Header 3
R18
R19
R20
R21
R7
22R
C36
10uF
C37
10uF
L4
4.7uH
U3
PGND
LX
BAT
EN
FO
VOUT
MODE
FB
AGND
AEN
XC9128B45CDR
C38
15pF
R34
180k F
R35
17.8k F
C39
10uF
C40
10uF
U4
CSB
VDD
VDDIO
SDO
SCL
SDA
GND
BMP180
R17
2k F
R10
2k F
C11
0.1uF
C12
0.1uF
U1
VIN
GND
EN
VOUT
NC
XC6209-B332MR/NP
C1
1uF
C2
10uF
D2
Green
R16
1k F
U5
BAT
/CHG
VSS
VIN
ISEN
XC6802A42XMR
R11
2k F
J4
0481900001
SW1
SK-12F-14G6
BT1
BATT 20mm HEADER
C19
10uF